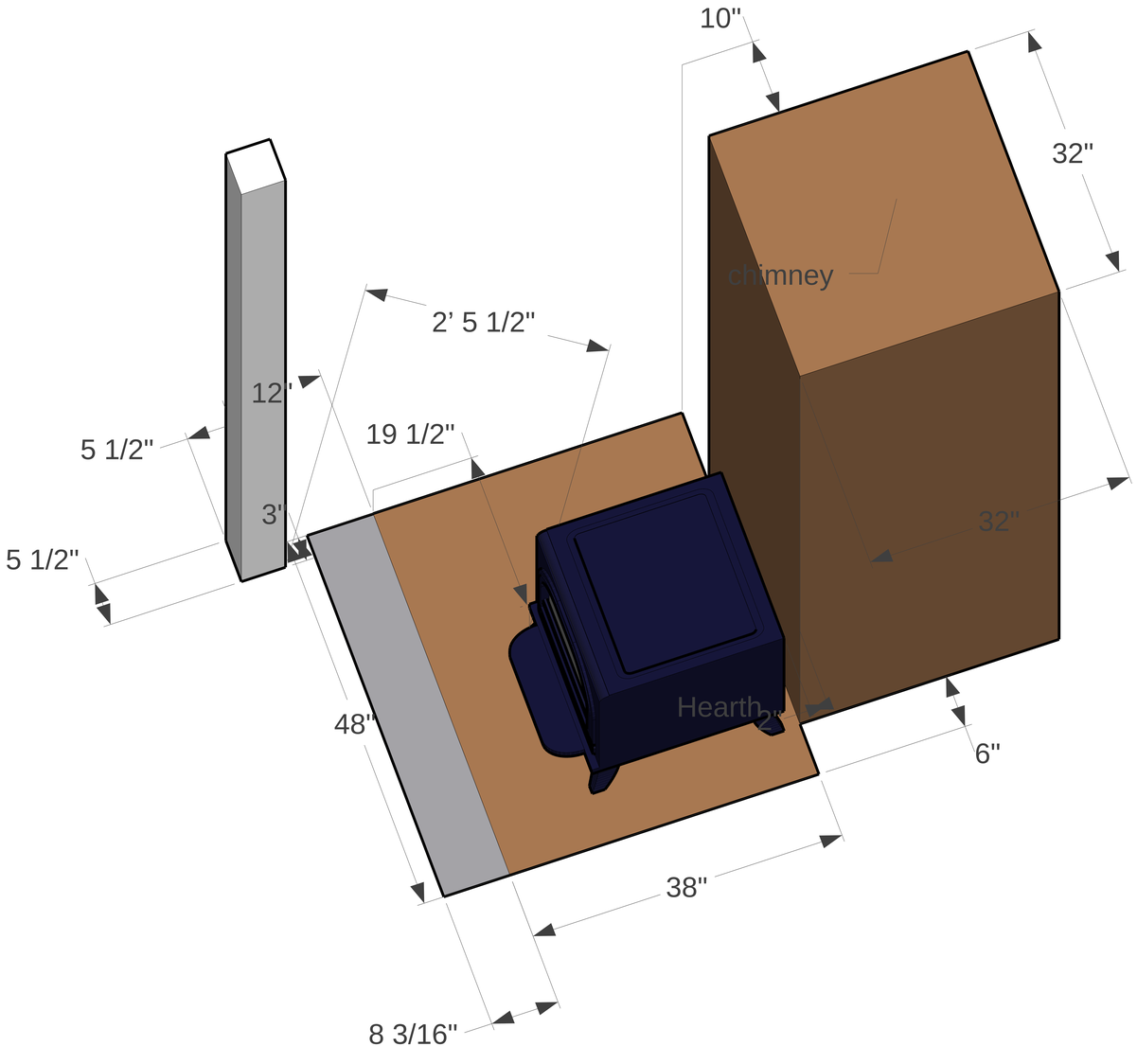
10"
32"
chimney
2' 5 1/2"
12"
19 1/2"
5 1/2"
3"
5 1/2"
32"
Hearth
2"
48"
6"
38"
8 3/16"