Remove the cookplate and lay the stove on its back. Install the legs and Hearth plate with the bolts provided using the two hexagon spacers in the outer hearth holes to secure the hearth to the stove bottom. DO NOT OVERTIGHTEN BOLTS.

The SCANDIA 308 comes complete with a bimetallic thermostat that when assembled automatically controls the air intake for draft control.. Check the draft blade to be sure there is a corner of the blade cut off. If not cut with a pair of tin snips as indicated in the parts list. (FIG 3A)

HOW TO INSTALL THE THERMOSTAT

Thermostat screws into the pre-drilled hole (Fig 3). Screw thermostat in about 4 or 5 revolutions DO NOT OVERTIGHTEN . Secure thermostat in place by tightening the lock nut. For proper adjustment during operation see instructions on page 34.

To properly set your thermostat move the control lever to the low position (–) as marked on stove top. With the draft blade closed adjust the chain until there is no slack, then secure in place using the lock nut.

The SCANDIA 308 has a reversible flue outlet, for top or rear venting. To change remove the two bolts that secure the flue. Choose which way you want to vent and secure the flue into place DO NOT OVERTIGHTEN BOLTS . It is a good idea to put some asbestos furnace cement on these pieces if a venting change has been made.

Check all seams for any cracks in the stove cement. If there are any use the can of cement supplied to fill these cracks in. It is advised to check all seams after every 3 months of use, as cement can deteriorate from constant expansion and contraction of the cast iron.

TO INSTALL HEAT SHIELDS

Join both the rear and hearth heat shields together using the bolts provided. (FIG. 1) Screw the 4 heat shield spacer bolts to the rear of the stove and attach the rear heat shield. (FIG. 3) Now secure the bottom heat shield to the two spacer bolts that hold the hearth plate in place.

Before burning your stove we recommend pouring about 1" of sand in the bottom of the firebox. The SCANDIA 308 is designed to burn without a grate.

In order to adhere to safety standards for installation, you must allow proper clearances from combustible surfaces, that the Scandia 308 has been tested and approved for. The following are minimum clearances from combustible materials when installed with heat shields:

	REAR VENTING	TOP VENTING
SIDE	24"	24"
BACK	28"	20"
CHIMNEY CONNECTOR	18" MINIMUM	18" MINIMUM
CHIMNEY CONNECTOR SIZE	8"	8"

A 3/8 asbestos millboard or equivalent should be used beneath your stove. (NEVER PLACE STOVE ON AN UNPROTECTED FLOOR OR RUG). This asbestos millboard or equivalent must extend a minimum of 8" from the sides and back and 18" from the front where the wood is loaded and projecting 2" to either side of the chimney connector.

NOTE: This stove is not approved unless installed with the required heat shields. You must use both the Rear and Hearth heat shields (RHS-308 and HHS-308). When venting it is required that you use the following: To top vent use a 1' foot section of 8" stainless steel pipe extending 1' foot up from the top of the flue. Or a 9" pipe heat shield extending 1' foot up from the top of the flue. To rear vent with an elbow you must use an 8" stainless steel elbow extending one foot up from top of flue. Or a 9" pipe heat shield extending one foot up from the top of the flue. See figures 5,6,7,8 on page 37. Always check with your local building department or inspector for specific recommendations they may have regarding the installation of wood burning stoves.

Connect the chimney connector to the chimney. The crimped end of the connector will fit inside the oval flue, by squeezing the bottom of the connector into an oval shape. Seal this connection with some stove cement to insure an airtight fit. Most building codes require that a listed low heat appliance chimney be used. Always check with your local building department or inspector for specific recommendations they may have regarding the installation of wood burning stoves.

NOTE: SEASON YOUR COOK TOP

To use the cook plate: Wash well with soap and water and dry completely. Use an unsalted fat and coat the top portion of the cook plate.. Place the cook top in an oven or on the stove and season at about 300° for at least two hours. Now wipe off the excess fat. The cook top will be hottest when the stove is operated with the damper in the open position.

OPERATION

Due to the fact that the Scandia 308 is built of cast iron, it needs to be "broken in". For the first few fires, build them small and let the heater warm up gradually. Even after the break-in period, never build a roaring fire in a cold heater, but allow it to warm up gradually. FAILURE TO FOLLOW THIS PROCEDURE CAN DAMAGE THE HEATER AND VOID THE WARRANTY.

To start your fire, move the thermostat to the open position (+) and open the main damper. Allow heater to bring the room to the desired temperature, then move the thermostat arm toward the minus (–) until the draft intake door (#031 FIG 3) is closed.

The thermostat will work automatically to control the room temperature once it is set.

Shut the main damper and allow the thermostat to control the fire. You will have to experiment a bit with the thermostat adjustment, in order to get the desired burn, and the desired heat output.

Always open the main damper before opening the front door. Failure to do so will create a smoke hazard.

The secondary air intake (FIG 1, #15) is used to allow air into the flue passage end of the firebox when burning prolonged fires, such as overnight, to maintain adequate combustion. Normally, it is left in the full open position, but with dry or well seasoned wood, you may wish to slow down the burn rate. This can be done by partially closing the shutter.

You will find that the Scandia 308 burns fuel efficiently and leaves little ash build up. Check at least once a week, and clean the ashes out only if they have built up enough to close off the air holes in the draft plate and tubes.

THERMOSTAT READJUSTMENT

Should you find that the thermostat appears to be shutting off the draft damper sooner than desired and you wish to increase the heat output adjustments may be made as follows:

Remove the rear heat shield. Set the thermostat at the closed position, remove the bead chain from the small tab on the draft blade and reset the chain one link shorter. Build up the fire and check the operation. It is wise to replace the heat shield even temporarily. Be careful not to adjust the chain too much; you may damage the thermostat coil.

BEFORE BURNING REREAD GENERAL INSTRUCTIONS ON PGS 4-14.

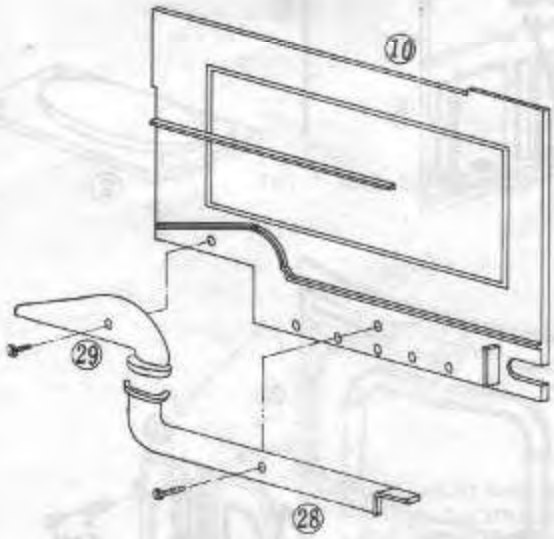

FIG. 2 REAR VIEW OF INTERIOR BAFFLE PLATE

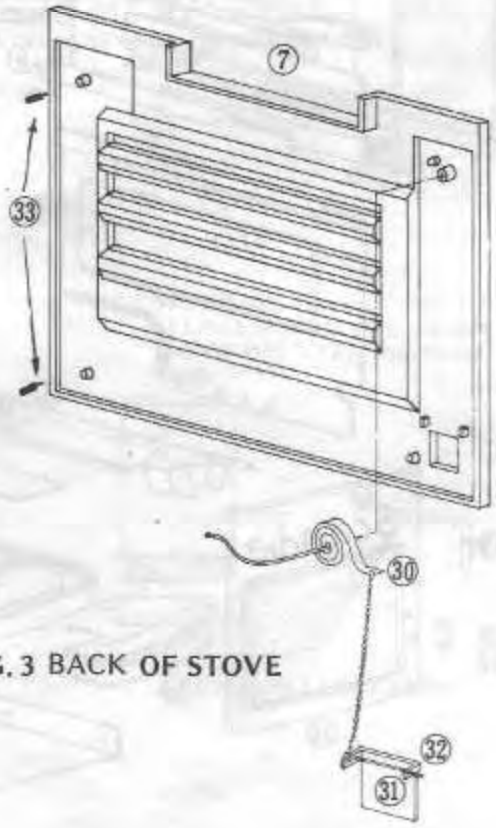

FIG. 3 BACK OF STOVE

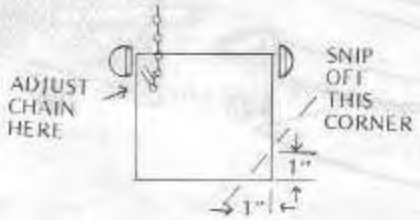

FIG 3A DRAFT INTAKE

PART LIST

NO.	REQ.	DISC.	NO.	REQ.	DISC.
1.	1	STEEL COOK PLATE	18.	1	HEARTH PLATE
2.	1	COOK PLATE BASE	19.	1	FRONT
3.	1	REVERSIBLE FLUE	20.	1	RIGHT DOOR
4.	1	TOP	21.	1	LEFT DOOR
5.	4	STOVE ROD	22.	1	DOOR HANDLE
6.	1	SIDE PLATE RIGHT SIDE	23.	1	LOCKING MECHANISM
7.	1	BACK PLATE OF STOVE	24.	1	SCREEN
8.	1	REAR HEAT SHIELD (RHS-308)	25.	1	HEARTH HEAT SHIELD (HHS-308)
9.	1	BAFFLE FOR BACK PLATE	26.	4	LEGS
10.	1	INTERIOR BAFFLE PLATE	27.	2	HEARTH HEAT SHIELD SPACER BOLTS
11.	1	MAIN DAMPER	28.	1	DRAFT TUBE SECTION (A)
12.	1	BAFFLE SYSTEM COVER PLATE	29.	1	DRAFT TUBE SECTION (B)
13.	1	DAMPER HANDLE	30.	1	BIMETTALIC THERMOSTAT
14.	1	SIDE PLATE LEFT SIDE	31.	1	DRAFT BLADE
15.	1	AUX. DRAFT CONTROL	32.	1	HINGE PIN
16.	1	LEFT DRAFT TUBE	33.	4	HEAT SHIELD SPACER BOLTS
17.	1	BOTTOM	34.	2	REMOVABLE PANEL (for glass conversion).

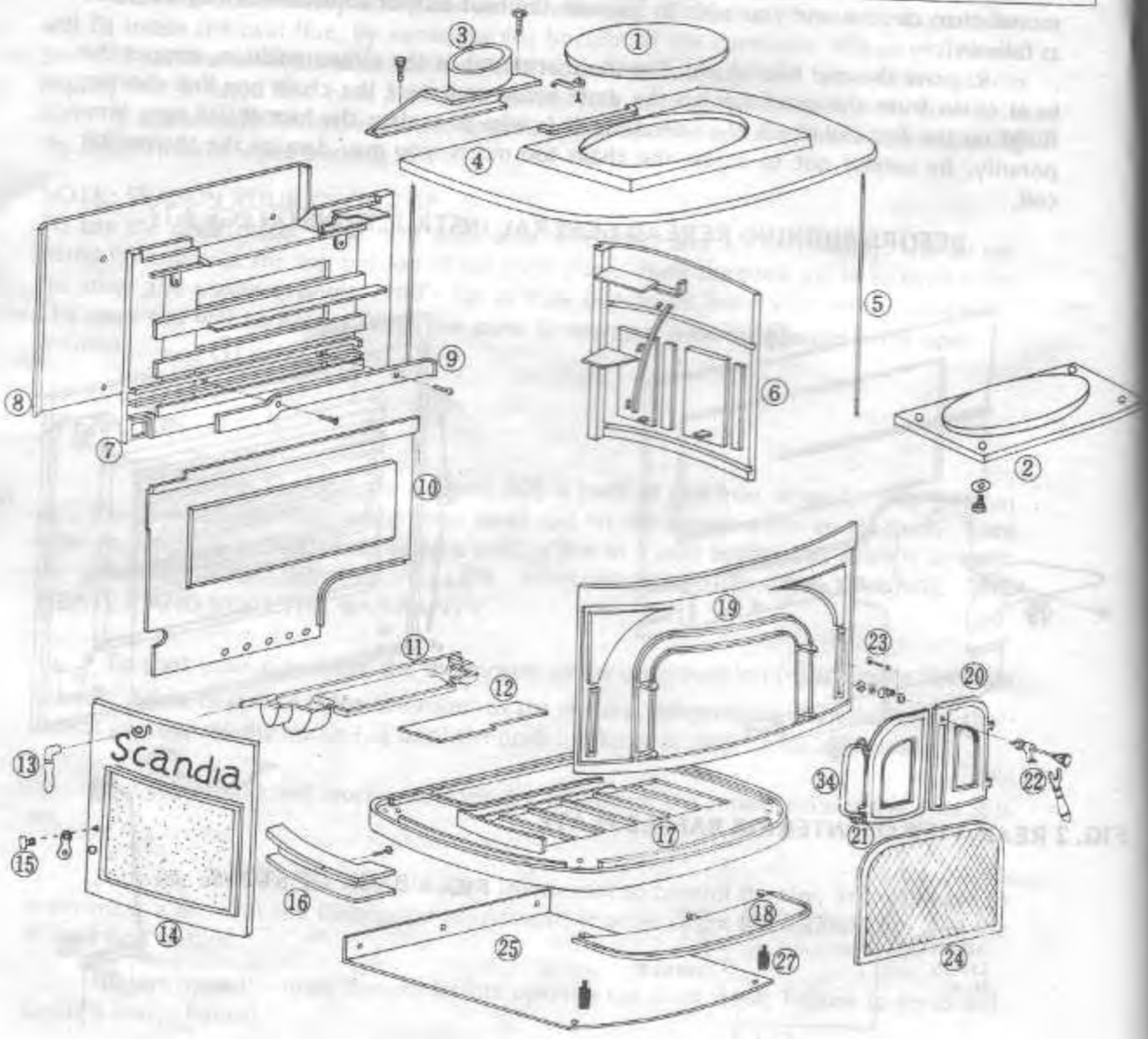

FIG 1

MODEL 308 PIPE SHIELDS:

FIG 5 AND 6 FOR REAR VENTING WITH AND ELBOW

FIG 5

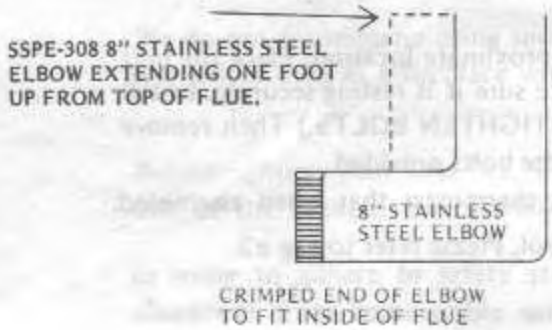

FIG 6

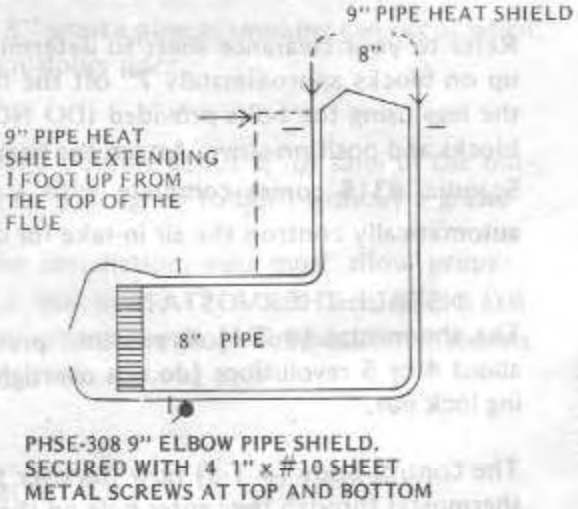

FIG 7 AND 8 FOR top VENTING

FIG 7

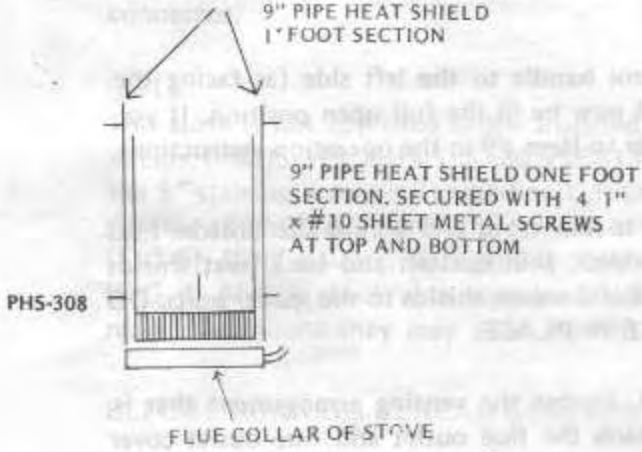

FIG 8

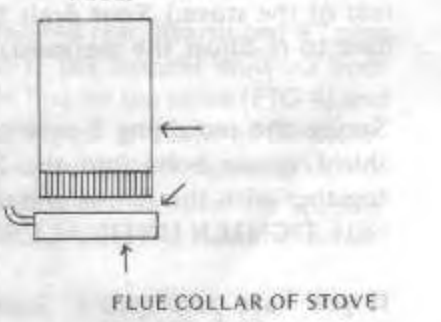

PFS LISTED

INSTALLATION AND OPERATING INSTRUCTIONS
For SCANDIA 315 & 315D HEATER-FIREPLACES

Refer to your clearance sheet to determine the approximate location. Place the unit up on blocks approximately 7" off the floor. Make sure it is resting securely. Install the legs using the bolts provided (DO NOT OVERTIGHTEN BOLTS.) Then remove blocks and position stove. Attach the hearth using the bolts provided.

Scandia #315 comes complete with a bimetallic thermostat that when assembled automatically controls the air in-take for draft control. Please refer to Fig #2.

TO INSTALL THERMOSTAT

The thermostat (# T-1) screws into pre-drilled hole (Fig #2). Screw thermostat in about 4 or 5 revolutions (do not overtighten). Secure thermostat in place by tightening lock nut.

The control body (# T-5) now fits over the thermostat by placing the handle of the thermostat through the center hole on the control body.

The control body of the thermostat is now secured in place by using one of the heat shield spacer bolts.

To properly set your thermostat move the control lever to the low position (looking at the stove from the rear) move the lever to the right side and connect the chain to the draft blade. With the draft plate closed adjust the chain until there is no more slack, then secure into position.

Test the thermostat by moving the control handle to the left side (as facing the rear of the stove.) Your draft blade should now be in the full open position. If you have to re-adjust the thermostat please refer to Item #9 in the operation instructions.

Secure the remaining 3 rear spacer bolts to the stove and secure the bottom heat shield spacer bolts into the 2 holes provided. Join bottom and back heat shields together with the screws and nuts provided and secure shields to the spacer bolts. DO NOT TIGHTEN UNTIL ALL SCREWS ARE IN PLACE.

If you have purchased a Scandia 315D, choose the venting arrangement that is most suitable to your installation and attach the flue outlet and flue outlet cover accordingly. It is a good idea to put some asbestos furnace cement on these pieces before attaching to insure a tight fit.

On Scandia models 315D season your cooktop in the following manner. Wash well with soap and water and dry completely. Use an unsalted fat and coat the top portion of the cookplate. Place the cookplate in an oven or on the stove and season at about 300° for at least two hours. Now wipe off the excess fat. The cookplate will be hottest when the stove is operated with the damper in the open position.

315D models come equipped with cast iron removeable panels mounted in the doors for conversion to glass. Glass door conversion kits may be bought through your dealer or by calling Franklin Cast Products toll free number on page 3 of this book. See Fig 3.

Connect the connector to the chimney. The crimped end of 8" pipe will fit inside the oval flue, by squeezing the bottom of the connector into an oval shape. Seal this connection with some stove cement to insure an airtight fit. Most building codes require that a listed low heat appliance chimney be used.

We do not recommend using smaller than 8" smoke pipe as smoking can occur when the unit is used as a fireplace with the front doors open.

Before lighting your first fire, we recommend pouring about 1" of sand in the bottom of the firebox. The Scandia 315 series is designed to burn without a grate.

In order to adhere to safety standards for installation, you must allow proper clearances from combustible surfaces; that the Scandia 315 has been tested and approved for. The following are minimum clearances from combustible materials when installed with heat shields:

SIDES	24"
BACK	18"
CHIMNEY CONNECTOR	18" MINIMUM
CHIMNEY CONNECTOR SIZE	8"

A 3/8" asbestos millboard hearthmat or equivalent should be used beneath the stove. (NEVER PLACE STOVE ON AN UNPROTECTED FLOOR OR RUG). Because the Scandia 315 can be loaded from the side and front, your hearth mat must extend a minimum of 18" from the front and side loading doors. And a minimum of 8" from the rear and right side of the stove and 2" to either side of the chimney connector.

NOTE:
This stove is not approved unless installed with the required rear, hearth and 8" pipe shields. (#RHS-315, HHS-315 and SSP-315). For approval, the installer must use both the 8" stainless steel pipe extending 1' foot up from the flue on the stove (FIG 4) and the rear and bottom hearth shield which will bolt onto the back and base of the stove. (FIG 6). If 8" stainless steel pipe is not available you may use a 9" pipe heat shield. (FIG 4) Always check with your local building department or inspector for specific recommendations they may have regarding the installation of wood burning stoves.

BEFORE BURNING REREAD GENERAL INSTRUCTIONS ON PGS 4-14.

NOTE: BE SURE TO READ AND FOLLOW CAUTIONS CAST ONTO THE FRONT OF THE STOVE AND ON THE SIDE FEED DOOR BEFORE AND DURING OPERATION OF THE STOVE.

OPERATION

Due to the fact that the Scandia 315 is built of cast iron, it needs to be "broken in". For the first few fires, build them small and let the heater warm up gradually. Even after the break-in period, never build a roaring fire in a cold heater, but allow it to warm up gradually. FAILURE TO FOLLOW THIS PROCEDURE CAN DAMAGE THE HEATER AND VOID THE WARRANTY.

To start your fire, move the thermostat to the open position. Open the main damper (handle is just above the left side door (FIG 2)

After about 10 minutes or once the fire is burning brightly, add as much wood as required, shut the main damper. Allow the heater to bring the room to the desired temperature then move the thermostat arm to the closed position until the draft blade (# t-7 Fig #2) is closed. The thermostat will automatically control the fire when properly set.

You will find the Scandia 315 does not get abnormally hot on the outside due to the unique design of the firebox, but the handles will get hot, so use the wooden handle sleeve, supplied with the stove, to avoid possible blistered fingers. (Part #26)

Never operate your stove with the doors open without the screen in place.

The auxilary draft control (Fig #2) is used to allow air into the flue passage end of the firebox when burning prolonged fires, such as overnight, to maintain adequate combustion. Normally, it is left in the full open position, but with dry or well seasoned wood, you may wish to slow down the burning rate, which can be done by partially closing the shutter.

You will find that the Scandia 315 burns fuel very efficiently and leaves very little ash build up. Be sure to check once a week and remove the ash build up only if it has accumulated enough to close off the air holes in the draft plate or tubes.

Thermostat Readjustment

Should you find that the thermostat appears to be shutting off the draft damper sooner than desired and you wish to increase the heat output, adjustments may be made as follows:

Remove the heat shield. Set the thermostat lever at the closed position, remove the bead chain from the small tab on the draft blade (Fig #2) and reset the chain one link shorter. Build up the fire and check the operation. It is wise to replace the heat shield even temporarily. Be careful not to adjust the chain too much; you may damage the thermostat coil or have the unit overheat.

PART LIST

NO.	REQ.	DISC.	NO.	REQ.	DISC.
1.	1	BOTTOM	23.	4	LEG BOLT
2.	2	LEFT DOOR	24.	4	LEG WASHER
3.	1	RIGHT DOOR	25.	4	DRAFT TUBE BOLT
4.	1	LEFT DRAFT TUBE	26.	1	WOODEN HANDLE SLEEVE
5.	1	RIGHT DRAFT TUBE	27.	4	STOVE ROD
6.	1	FRONT	28.	4	CAP NUT
7.	1	BLIND END	29.	1	SCREEN
8.	1	OPEN END			
9.	1	NARROW DOOR	T1.	1	BIMETTALIC THERMOSTAT
10.	1	BAFFLE	T2.	1	LOCK NUT
11.	1	FALSE BACK END	T3.	1	BEAD CHAIN
12.	1	DAMPER	T4.	1	THERMOSTAT HANDLE
13.	1	BACK	T5.	1	CONTROL BODY
14.	1	TOP	T6.	1	HINGE PIN
15.	1	FRONT HEARTH PLATE	T7.	1	DRAFT BLADE
16.	1	TOP HEAT PLATE			
17.	4	LEGS	H1.	6	BOLT
18.	1	AUXILARY DRAFT COVER	H2.	6	WASHER
19.	1	AUX. DRAFT COVER SPRING	H3.	6	HEAT SHIELD SPACERS
20.	1	AUX. DRAFT COVER BOLT	H4.	1	HEAT SHIELD REAR
21.	2	DOOR HANDLE	H5.	1	HEAT SHIELD HEARTH
22.	1	DAMPER HANDLE			

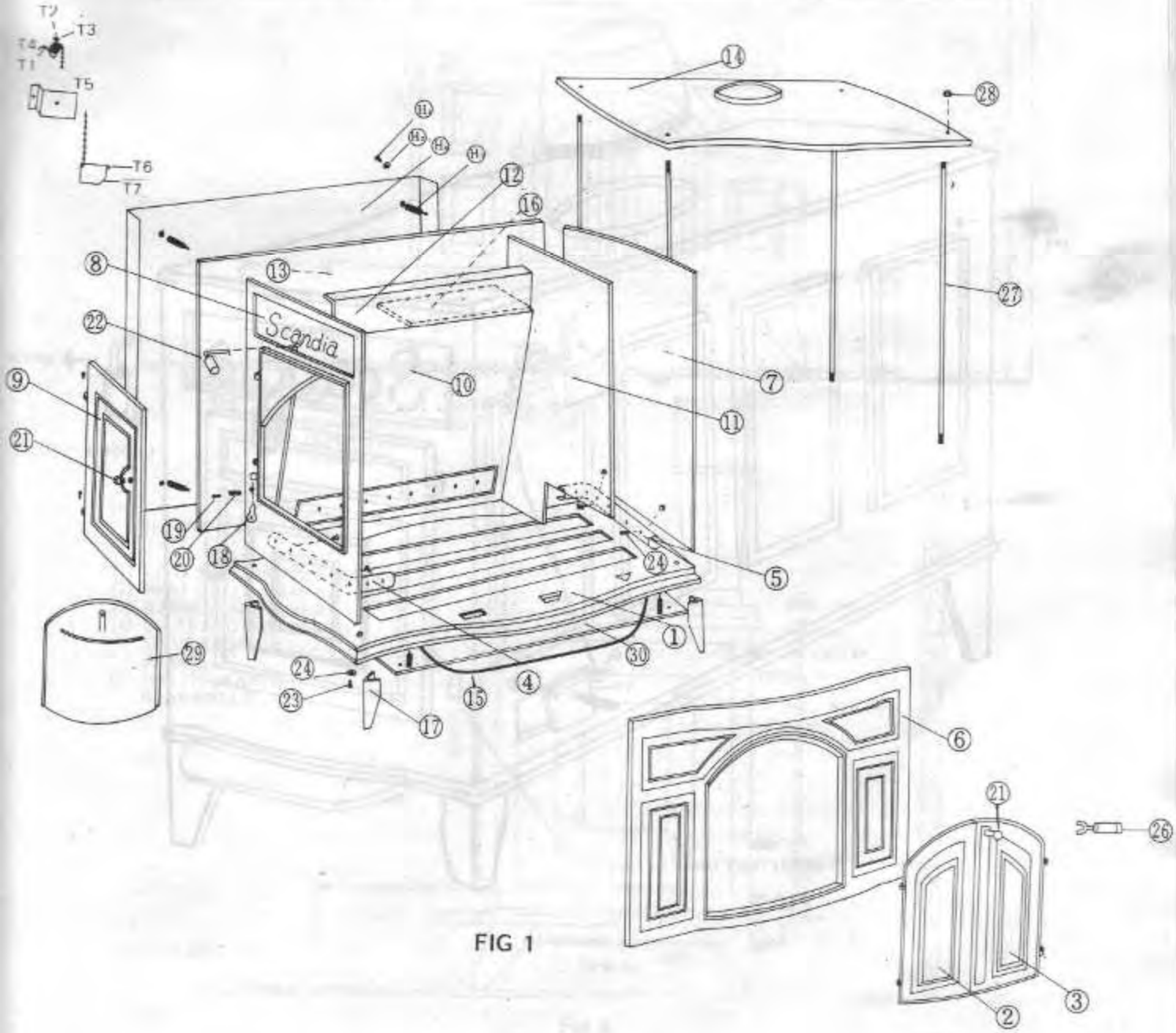

FIG 1

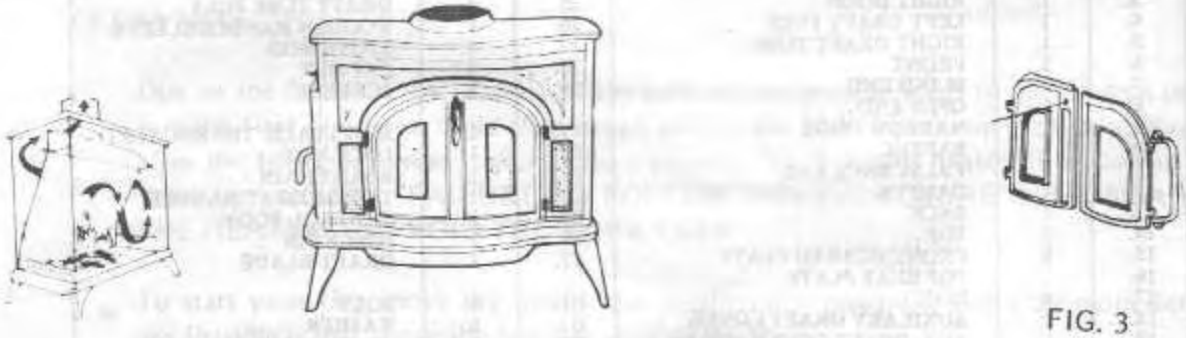

FIG. 3

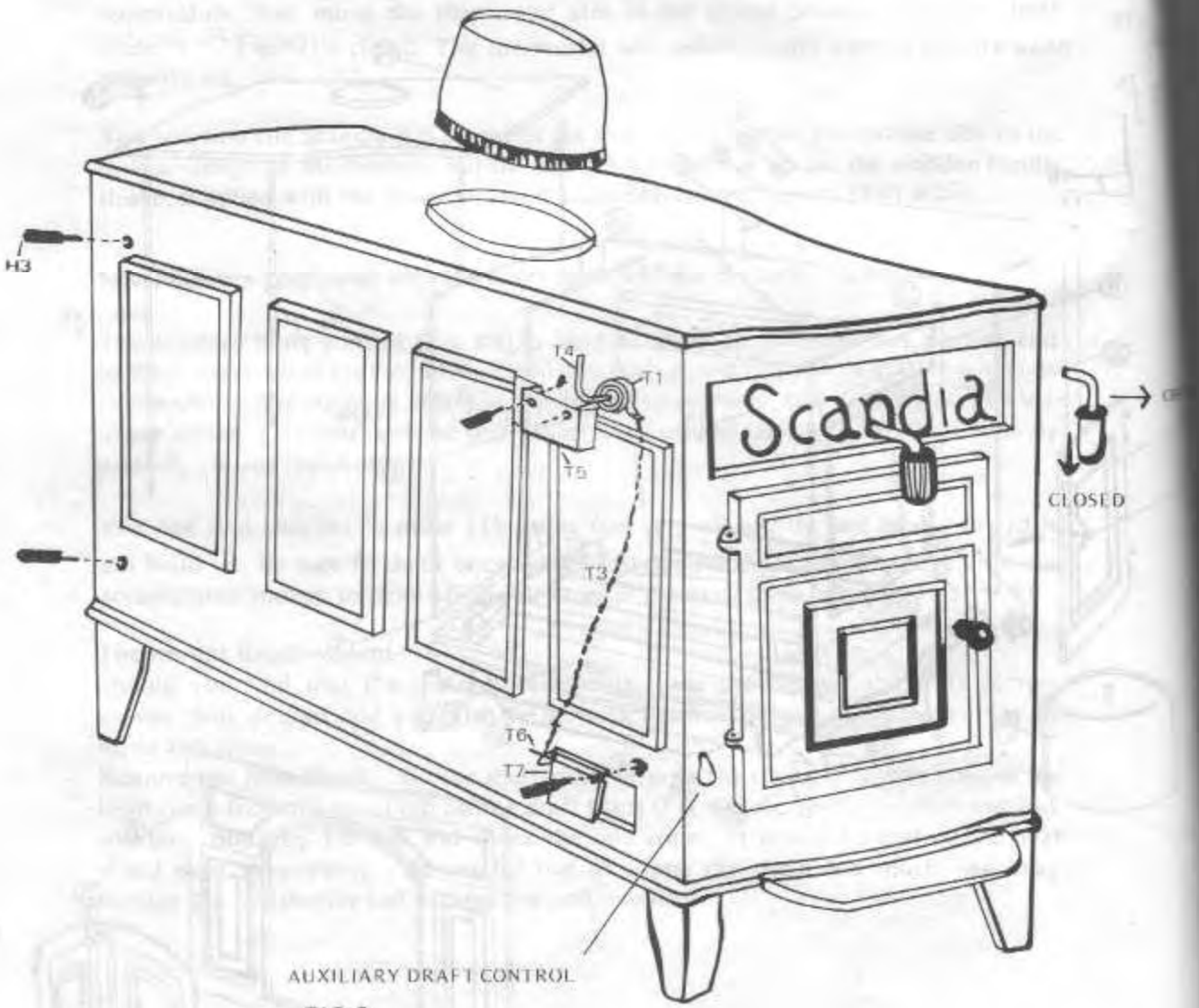

FIG 2.

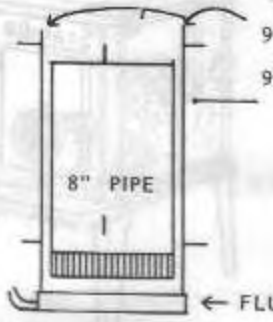

Fig 4

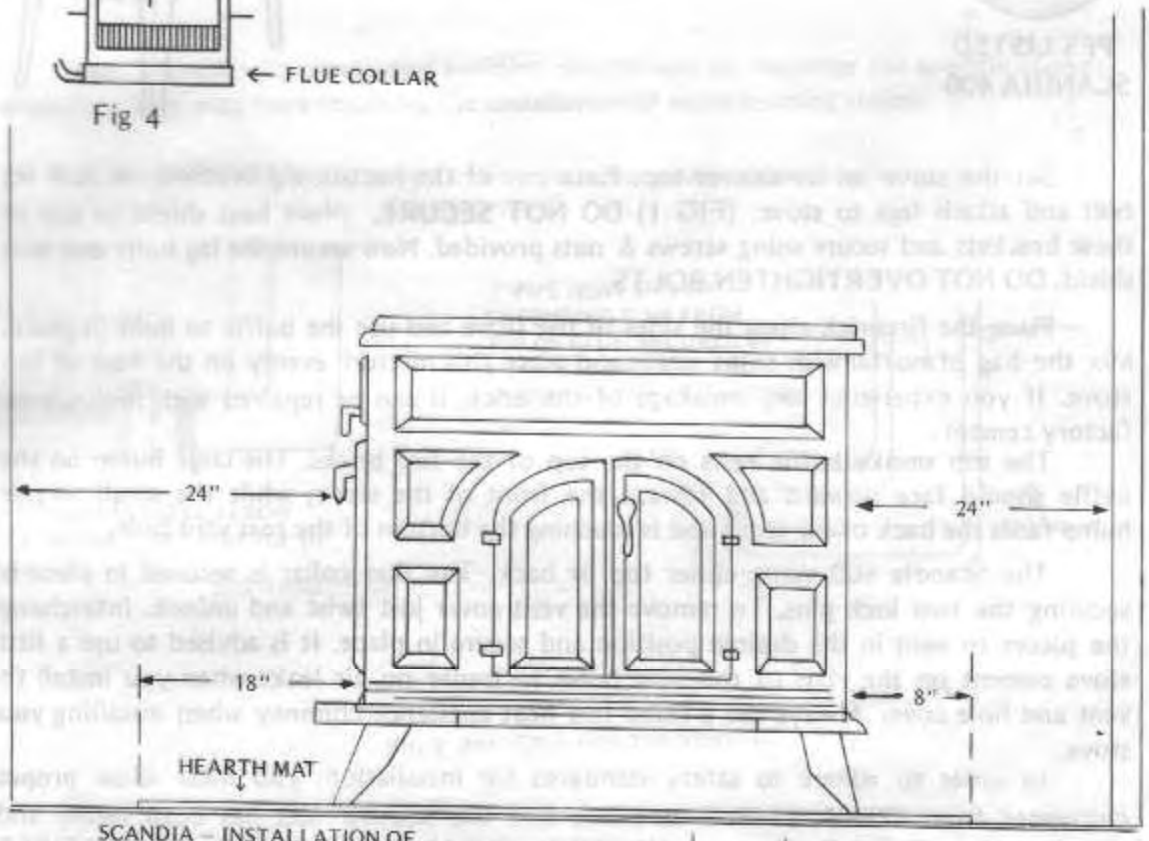

SCANDIA 315 – INSTALLATION OF HEAT SHIELDS AND CLEARANCES FROM COMBUSTIBLE SURFACES.

Fig 5

(1) HEAT SHIELD SPACER BOLTS
(2) HEAT SHIELD – RHS-315
(3) WASHERS AND SCREWS
(4) BOLTS AND WASHERS TO SECURE BOTTOM HEARTH SHIELD
(5) HHS-315-HEARTH HEAT SHIELD

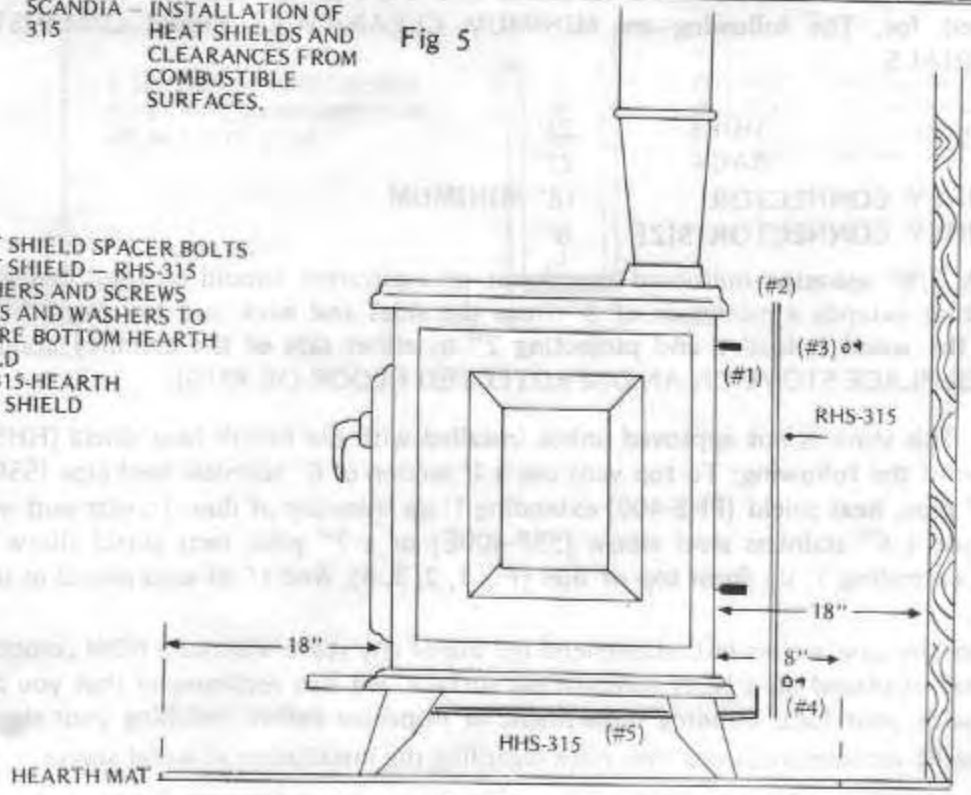

Fig 6

PFS LISTED
SCANDIA 400

Set the stove on its side or top. Place one of the heat shield brackets on each leg bolt and attach legs to stove. (FIG 1) DO NOT SECURE. place heat shield on top of these brackets and secure using screws & nuts provided. Now secure the leg bolts and heat shield. DO NOT OVERTIGHTEN BOLTS.

Place the firebrick along the sides of the stove and use the baffle to hold in place. Mix the bag of mortar with some water and place this mixture evenly on the base of the stove. If you experience any breakage of the brick, it can be repaired with firebrick refactory cement.

The top smoke baffle rests on the top of the fire bricks. The large hump on the baffle should face upward and toward the front of the stove; while the small reverse hump faces the back of the stove and is touching the bottom of the rear vent hole.

The Scandia 400 vents either top or back. The flue collar is secured in place by securing the two lock pins. To remove the vent cover just twist and unlock. Interchange the pieces to vent in the desired position and secure in place. It is advised to use a little stove cement on the rims of the vent holes to insure no air leaks when you install the vent and hole cover Always use a listed low heat appliance chimney when installing your stove.

In order to adhere to safety standards for installation, you must allow proper clearances from COMBUSTIBLE surfaces; that the Scandia 400 has been tested and approved for. The following are MINIMUM CLEARANCES FROM COMBUSTIBLE MATERIALS.

SIDES	24"
BACK	25"
CHIMNEY CONNECTOR	18" MINIMUM
CHIMNEY CONNECTOR SIZE	6"

A 3/8" asbestos millboard hearthmat or equivalent should be used beneath the stove, that extends a minimum of 8" from the sides and back and 18" from the front where the wood is loaded and projecting 2" to either side of the chimney connector. (NEVER PLACE STOVE ON AN UNPROTECTED FLOOR OR RUG).

NOTE: This stove is not approved unless installed with the hearth heat shield (HHS-400) and one of the following: To top vent use a 1' section of 6" stainless steel pipe (SSP-400) or a 7" pipe, heat shield (PHS-400) extending 1' up from top of flue. To rear vent with an elbow use a 6" stainless steel elbow (SSP-400E) or a 7" pipe, heat shield elbow (PHS-400E), extending 1' up from top of flue (Fig 1, 2, 3, 4). And 1" of sand placed in the fire box.

In any case we do not recommend the use of any stove without a NON combustible floor mat or placed on a NON combustible surface. We also recommend that you always check with your local building department or inspector before installing your stove, for any specific recommendations they have regarding the installation of wood stoves.

BEFORE BURNING REREAD GENERAL INSTRUCTIONS ON PGS 4-14.

BEFORE BURNING REREAD GENERAL INSTRUCTIONS ON PGS 4-14.

Always check with your local building department or inspector for specific recommendations they may have regarding the installation of wood burning stoves.

Fig 1, AND 2 FOR REAR VENTING WITH AN ELBOW.

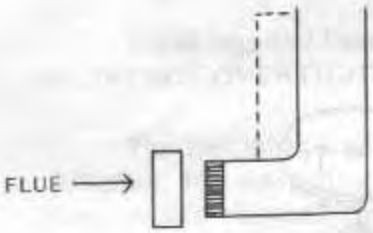

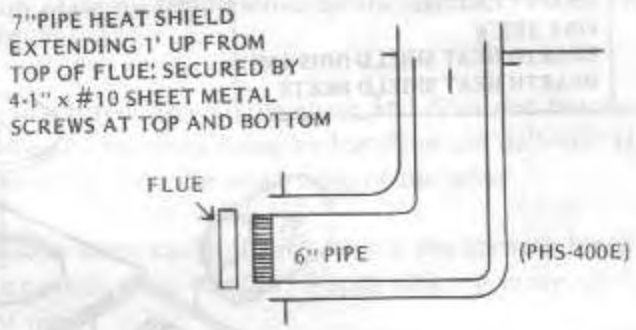

FIG 3 And FIG 4 FOR TOP VENTING

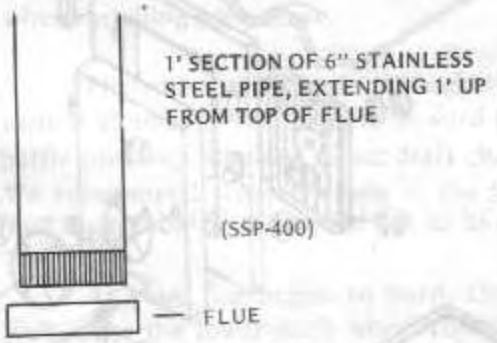

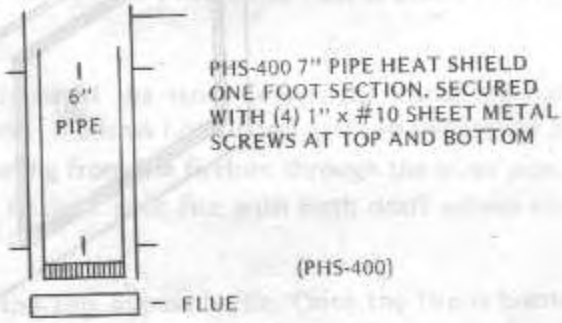

PART LIST

NO.	REQ.	DISC.
1.	1	TOP LID
2.	1	VENT COVER
3.	1	REVERSIBLE FLUE COLLAR
4.	1	BACK PLATE
5.	1	TOP PLATE
6.	2	SIDE PLATE
7.	1	BAFFLE
8.	1	BOTTOM PLATE
9.	4	LEGS
10.	1	AIR-PRE HEAT CHAMBER
11.	1	FRAME OF FRONT DOOR
12.	1	DOOR LATCH
13.	1	FRONT DOOR
14.	1	DOOR HANDLE
15.	1	DRAFT CONTROL
16.	8	FIRE BRICK
17.	1	HEARTH HEAT SHIELD (HHS-400)
18.	4	HEARTH HEAT SHIELD BRKTS

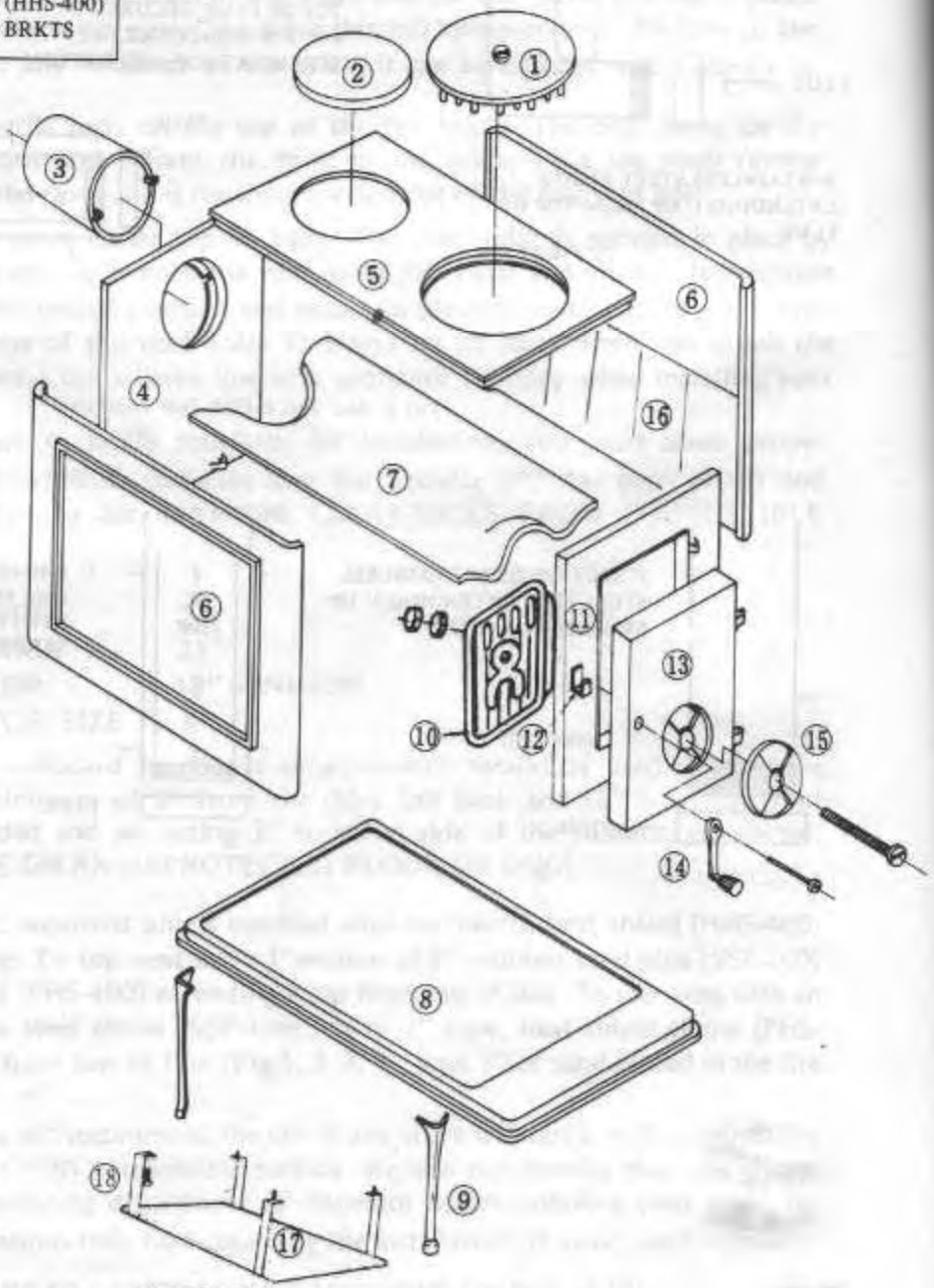

(HHS-400)

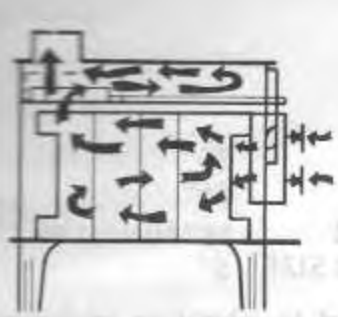

PFS LISTED

SCANDIA 500

Install legs and hearth extension plate by laying stove on its side and bolting them on. DO NOT OVERTIGHTEN BOLTS.

The top inner baffle is a manufactured part of the stove and does not require installation. The side baffle plates will usually be jarred loose by handling and delivery. Hang them on their respective mounting knobs cast into the inner sides of the stove.

Try the draft wheels, they should open easily. If not, check the threads for stove cement or foreign matter that may be causing them to stick. A little silicone spray will help them initially but will burn off at first use.

The 500 has a more complex baffle system than the smaller box heaters. The draft air enters through the draft wheels and creates combustion in the firebox; hot air and gases circulate around the side baffles spreading the heat evenly throughout all the cast surfaces. Air leaves the firebox through two small openings in the back of the top baffle. It is then channeled toward the front of the stove in the upper chamber and doubled back through a central chamber to the stove-pipe outlet. Always use a listed low heat appliance chimney when installing your stove.

The rod that extends through the front of the stove adjusts the inside top baffle central chamber. By pulling it forward (open), it allows hot air and gases to bypass the rear baffle openings allowing direct draft channeling from the firebox through the stove pipe. We recommend for fast starts in the 500 to light your fire with both draft wheels open and the top baffle rod pulled out to its end.

As your fire begins to burn, close the top bypass baffle. Once the fire is burning well, close the lower draft wheel completely and use only the upper wheel to control the fire. The length of time you leave the lower wheel open will vary depending on different draft and chimney applications.

Draft settings will vary; experiment to see what suits your needs; soon you will know what settings are best for your heating requirements.

CAUTION: Wear a heat resistant glove whenever you adjust draft controls. Always use the wooden handle supplied with your stove, whenever opening the door of this stove, to avoid possible blistered fingers.

In order to adhere to safety standards for installation, you must allow proper clearances from COMBUSTIBLE surfaces; that the Scandia 500 has been tested and approved for. The following are MINIMUM CLEARANCES FROM COMBUSTIBLE MATERIALS.

MATERIALS:

SIDES	36"
BACK	36"
CHIMNEY CONNECTOR	18" MINIMUM
CHIMNEY CONNECTOR SIZE	6"

A 3/8" asbestos millboard hearthmat or equivalent should be used beneath the stove, that extends a minimum of 8" from the sides and back and 18" from the front where wood is loaded and projecting 2" to either side of the chimney connector. (NEVER PLACE STOVE ON AN UNPROTECTED FLOOR OR RUG OR OTHER COMBUSTIBLE SURFACE).

Note:

This stove is not approved without the use of 1" of sand placed in the fire box below the hearth plate.

When venting your stove you are required to use a 1' section of stainless steel pipe, to meet applicable standards.

If 6" stainless steel pipe is not available, you may use a 7" pipe heat shield. (Refer to FIG A below.)

In some cases a 5" adaptor is supplied with your stove. Make sure you install the smaller end of this adaptor inside the flue of your stove. The larger end of this adaptor will accept 6" pipe so that it fits inside the adaptor.

BEFORE BURNING REREAD GENERAL INSTRUCTIONS ON PGS 4-14.

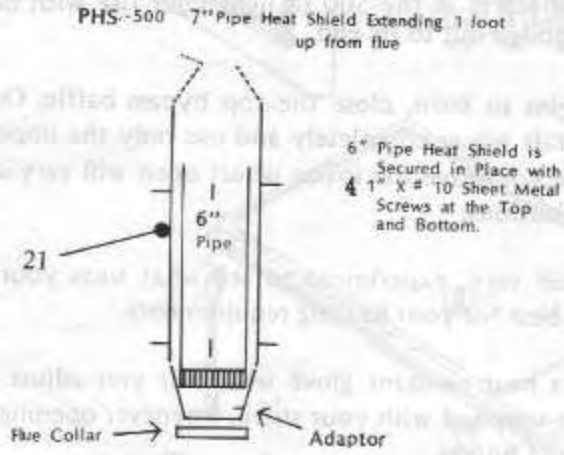

FIG A

PART LIST

NO.	REQ.	DESC.
2.	1	TOP LID
3.	1	TOP PLATE OR STOVE
4.	1	BACK PLATE
5.	2	SIDE PLATE
6.	1	BOTTOM PLATE
7.	1	FRONT PLATE
8.	2	INTERIOR SIDE BAFFLE
9.	1	INTERIOR BAFFLE
10.	1	INTERIOR-ADJUSTABLE BAFFLE
11.	1	CONTROL ROD-ADJUSTABLE BAFFLE
12.	1	WOODEN KNOB
13.	1	FRONT DOOR
14.	2	DRAFT CONTROL WHEEL
15.	1	AIR-PREHEAT CHAMBER
16.	4	LEGS
17.	1	WOODEN HANDLE SLEEVE
18.	1	DOOR LATCH
19.	1	DOOR FLAP
20.	1	HEARTH PLATE

1' FOOT SECTION OF 5" STAINLESS STEEL PIPE EXTENDING 1' FOOT UP FROM THE FLUE SSP-500

PFS LISTED

SCANDIA 1000

SCANDIA 1000

Lay stove on its back and attach legs. (DO NOT OVERTIGHTEN BOLTS). Remove protective pieces that protect the door actuator on the bottom of the stove. NEVER PLACE STOVE UPRIGHT WITHOUT LEGS ON UNLESS PROTECTIVE PIECES ARE IN PLACE.

Top smoke baffle should be in place. If it has jarred loose reinstall by removing top vent cover. Hold baffle straight up in the stove with the smaller notched ends facing downwards. Angle the baffle so the bottom portion rest on the supports. The top of the baffle will rest on the cast notches on the upper sides of the unit. You may have to work with the baffle a bit for it to fit, but the piece will drop into place when angled correctly.

If doors come off, they can easily be replaced by inserting the top of the door first and slipping the bottom into it's track much like a sliding cabinet door.

Initially the door mechanism can operate tighter than when broken in; slight lubrication with graphite can be helpful. Heat will cause this to disseminate quickly so lubricate often.

When using the 1000 as a fireplace, open doors all the way and install spark guard by sliding sides of spark guard between doors and body of the stove.

NOTE: This stove is approved for top venting only with an 8" connector. Always use a listed low heat appliance chimney. When venting through a ceiling it is required that you use a ceiling heat shield. (Please refer to installation instructions).

CAUTION: Doors and handle can become hot when stove is in operation. Wear a heat resistant glove or use the wooden handle supplied with your stove, whenever opening or closing doors.

In order to adhere to safety standards for installation, you must allow proper clearances from COMBUSTIBLE surfaces that the Scandia 1000 has been tested and approved for. The following are MINIMUM CLEARANCES FROM COMBUSTIBLE MATERIALS:

SIDES	24"
BACK	36"
CHIMNEY CONNECTOR	18" MINIMUM
CHIMNEY CONNECTOR SIZE	8"

NOTE: This unit is not approved without the ceiling heat shield (CHS-1000).

A 3/8" asbestos millboard hearthmat or equivalent should be used beneath the stove, that extends a minimum of 8" from the sides and back and 18" from the front where the wood is loaded and projecting 2" to either side of the chimney connector. (NEVER PLACE STOVE ON AN UNPROTECTED FLOOR OR RUG OR OTHER COMBUSTIBLE SURFACE.)

INSTALLATION INSTRUCTIONS FOR SCANDIA 1000

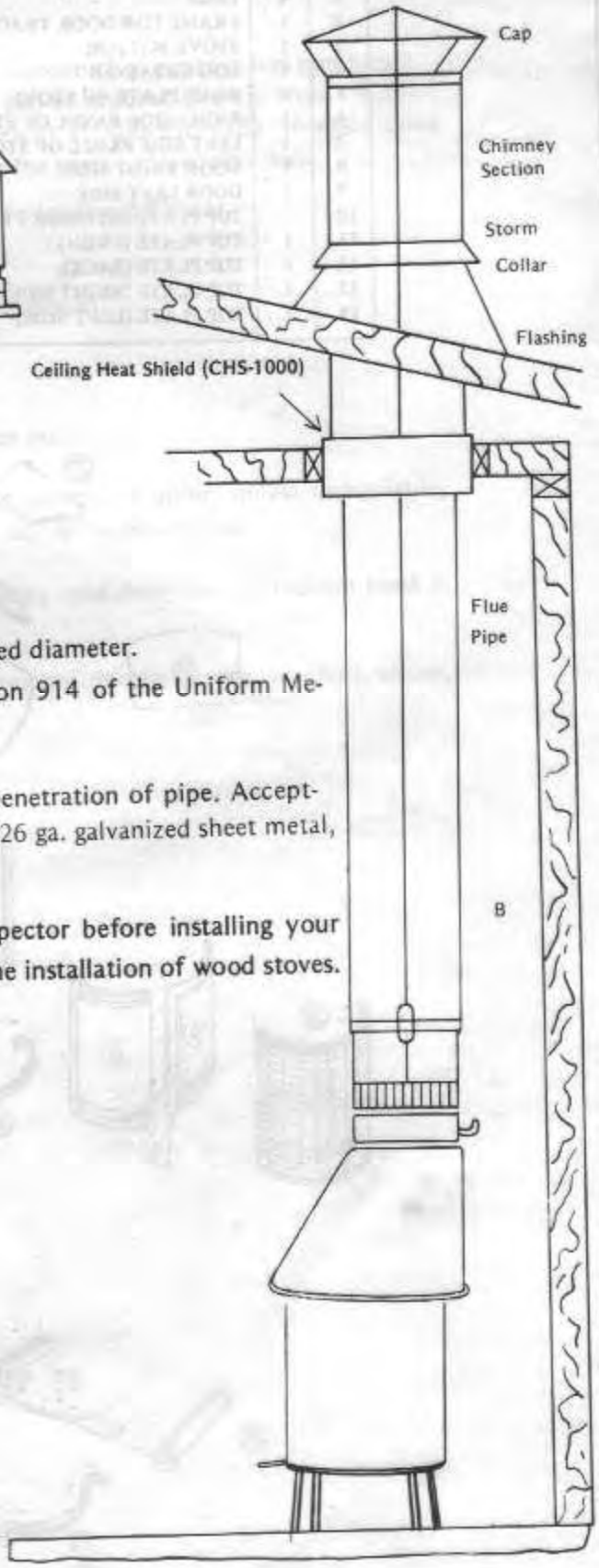

1. Frame ceiling and roof to fit approved chimney of the required diameter.
   Use a listed low heat appliance chimney as defined in section 914 of the Uniform Mechanical code.
2. CEILING HEAT SHIELD:
   The ceiling heat shield required is a 26" diameter around penetration of pipe. Acceptable materials for this heat shield are, (A) 3/8" asbestos, (B) 26 ga. galvanized sheet metal, (C) ½" firecode sheet rock installed directly to the ceiling.
3. **Always check with your local building department or inspector before installing your stove. For specific recommendations they have regarding the installation of wood stoves.**

PART LIST

NO.	REQ.	DISC.	NO.	REQ.	DISC.
1.	4	LEGS	15.	1	FLUE VENT
2.	1	FRAME FOR DOOR TRACK	16.	1	FLUE OUTLET
3.	1	STOVE BOTTOM	17.	1	VENT COVER PLATE
4.	1	LOG RETAINER	18.	2	DRAFT CONTROLS
5.	1	REAR PLATE OF STOVE	19.	1	INTERIOR BAFFLE (LEFT SIDE)
6.	1	RIGHT SIDE PANEL OF STOVE	20.	1	INTERIOR BAFFLE (RIGHT SIDE)
7.	1	LEFT SIDE PANEL OF STOVE	21.	1	INTERIOR BAFFLE (BACK)
8.	1	DOOR RIGHT SIDE	22.	1	DOOR CONTROL FRAME
9.	1	DOOR LEFT SIDE	23.	1	DOOR CONTROL MECHANISM
10.	1	TOP PLATE INTERIOR FRAME	24.	1	SPARK GUARD
11.	1	TOP PLATE (FRONT)	25.	1	SMOKE BAFFLE
12.	1	TOP PLATE (BACK)	26.	1	WOOD HANDLE
13.	1	TOP PLATE (RIGHT SIDE)	27.	1	CEILING SHIELD
14.	1	TOP PLATE (LEFT SIDE)			

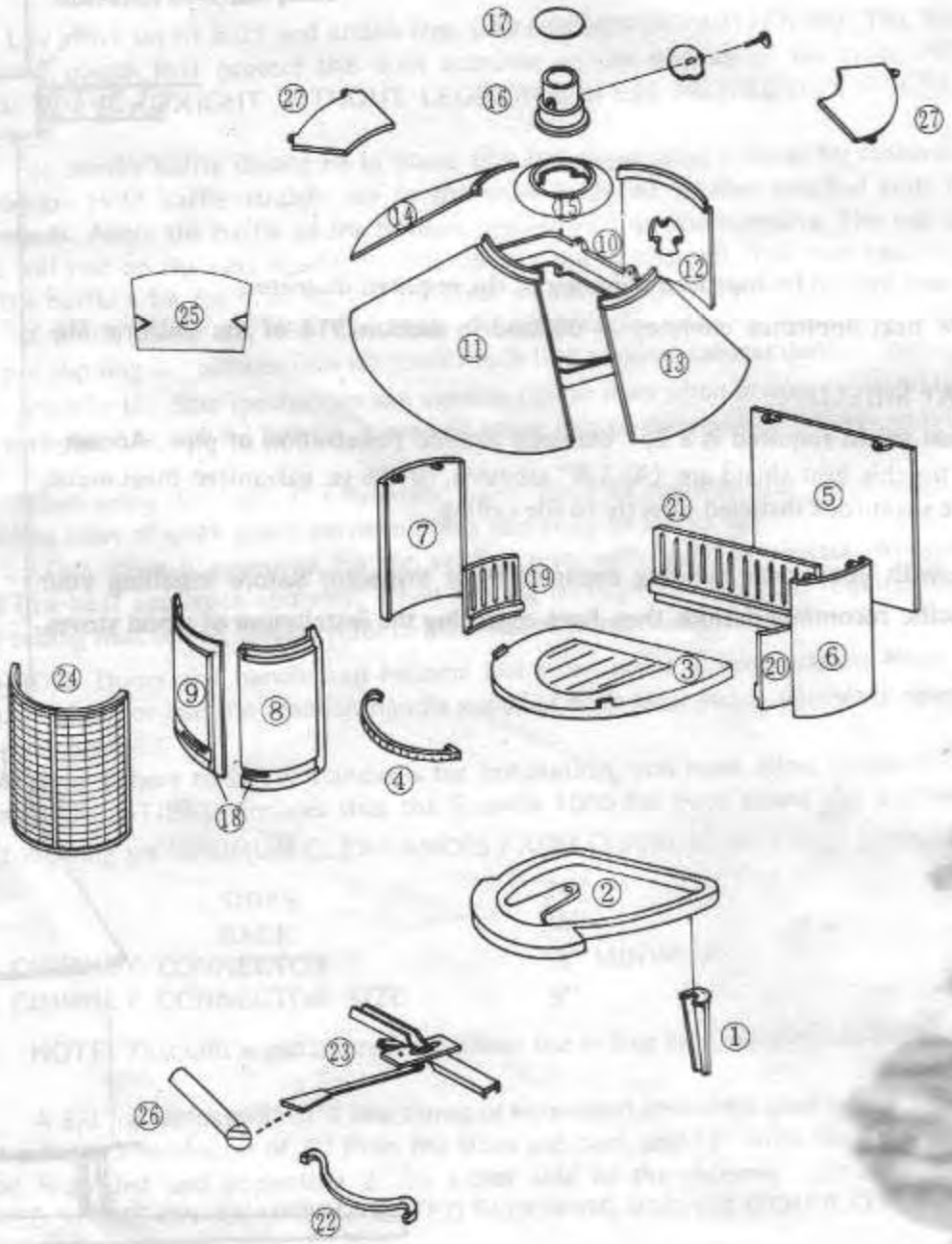

HOW TO ORDER SPARE PARTS

1. Spare parts should be ordered through the dealer from which your stove was purchased. If the dealer cannot or will not obtain parts they can be ordered directly from Franklin Cast Products, Inc. by calling our parts department at 800-556-7382. In most cases there will be a small handling and shipping charge for parts ordered this way.

2. Prior to calling directly for parts, please have the following imformation ready.

   A. Model Number
   B. Part Number and description (from instruction book)
   C. Serial number of stove (Found on rear label)
   D. Date of purchase
   E. Dealers name
   F. Reason for needing parts. (ex. missing, broken etc.)

3. Parts are generally shipped within 72 hrs from receipt of order, unless unavailable, in which case you will be notified at the time of call or by return mail.

4. Parts requests will be honored only if the warranty card from the instruction book is on record at Franklin Cast Products.

5. There will be a charge for parts broken or damaged due to misuse, accident, abuse, alteration, or neglect.

HEAT SHIELDS and PIPE SHIELDS – For specific stoves in order to meet ICBO standards as outlined on stove labels for states that have instituted new building code regulations for the installation of woodburning stoves near or on combustible material.

QUANTITY ORDERED		PACK	PRICE		
HHS-100 Bottom Heat Shield for Scandia 100		1	6.32		
HHS-150 Bottom Heat Shield for Scandia 150		1	5.36		
PHSE-150 Elbow Pipe Shield, 7" diameter, for Scandia 150 when venting with elbow.		1	9.00		
PHS-150 One foot length, 7" diameter, Pipe Shield for straight vent on Scandia 150		1	5.94		
HHS-200 Bottom Heat Shield for Scandia 200		1	9.68		
HHS-250 Bottom Heat Shield for Scandia 250		1	8.24		
PHS-250 One foot straight Pipe Shield, 9" diameter, for top venting of Scandia 250		1	7.00		
PHSE-250 Elbow Pipe Shield, 9" diameter, for backing venting Scandia 250		1	12.20		
PHS-300 One foot length, 9" diameter, straight Pipe Shield for top venting Scandia 300		1	7.00		
PHSE-300 Elbow Pipe Shield, 9" diameter, for back venting Scandia 300		1	12.20		
PHS-308 One foot straight Pipe Shield, 9" diameter, for top venting of Scandia 308		1	7.00		
PHSE-308 Elbow Pipe Shield, 9" diameter, for backing venting Scandia 308		1	12.20		
HHS-315 Bottom Heat Shield for Scandia 315		1	8.74		
PHS-315 One foot length Pipe Shield, 9" diameter, for top venting of Scandia 315		1	7.00		
HHS-400 Bottom Heat Shield for Scandia 400		1	5.44		
PHS-400 One foot length Pipe Shield, 6" diameter, for top venting of Scandia 400		1	4.80		
PHSE-400 Elbow Pipe Shield, 6" diameter, for back venting of Scandia 400		1	8.20		
PHS-500 One foot length Pipe Shield, 6" diameter, for top venting Scandia 500		1	4.80		
HHS-601 **RHS-601** Rear and Hearth Heat Shield for Franklin 601 and 601-B		1	15.52		

Please mail check or money order to Franklin Cast Products Inc.
1800 Post Road, Warwick, RI 02886 Attn: Customer Service
Please Print or Type name and address

Thank You.

Franklin Cast Products, Inc.

Limited Warranty

Franklin Cast Products, Inc. ("FCP") is the importer and not the manufacturer of the cast iron stove and accessories to which this Limited Warranty applies.

FCP warrants to the original retail purchaser that the stove and accessories imported by FCP are free from defects in material and workmanship which would render them unfit for normal home use.

The obligation of FCP under this Warranty is limited in the following manner.

1. FCP will replace any part(s) covered by this Limited Warranty (other than trim or accessories) or the entire stove at its option, which prove to be defective in material or workmanship under normal home use within five (5) years after the date of original purchase.

2. FCP will replace any trim or accessories imported by FCP, such as beanpots, hangers, grates, grills, knobs, brass balls, tool sets or lifters, which prove to be defective in material or workmanship under normal home use within one (1) year after the date of original purchase of the stove.

3. THIS WARRANTY SHALL NOT APPLY, AND FCP SHALL HAVE NO OBLIGATIONS WITH RESPECT TO ANY STOVE, PART OR ACCESSORY WHICH HAS BEEN SUBJECT TO ACCIDENT, ABUSE, ALTERATION, MISUSE OR NEGLECT OR WHICH HAS NOT BEEN INSTALLED, INSPECTED, OPERATED AND MAINTAINED IN ACCORDANCE WITH ALL APPLICABLE LOCAL CODES AND REGULATIONS AND IN ACCORDANCE WITH THE MANUFACTURER'S PRINTED INSTRUCTIONS.

4. FCP MAKES NO WARRANTY WHATSOEVER WITH RESPECT TO ANY ACCESSORIES OR PARTS NOT IMPORTED BY FCP.

5. THIS WARRANTY SHALL NOT APPLY, AND FCP SHALL HAVE NO OBLIGATIONS WITH RESPECT TO ANY GLASS, ISINGLASS, FURNACE CEMENT, ASBESTOS OR FIREBRICK SOLD OR USED WITH THE STOVE, OR SURFACE RUST WHICH MAY OCCUR IN TRANSIT, STORAGE OR USE.

6. THE OBLIGATION OF FCP UNDER THIS WARRANTY OR UNDER ANY IMPLIED WARRANTY, INCLUDING THOSE OF MERCHANTABILITY AND FITNESS FOR ANY PARTICULAR PURPOSE, SHALL BE LIMITED TO THE FURNISHING OF REPLACEMENT PARTS, OR A REPLACEMENT STOVE AT ITS OPTION, AND FCP SHALL IN NO EVENT BE LIABLE FOR CONSEQUENTIAL OR OTHER MONETARY DAMAGES OR FOR ANY LABOR CHARGES OR OTHER EXPENSES OF REMOVING, INSPECTING, REPAIRING OR SHIPPING ANY DEFECTIVE PART(S) OR STOVE OR OF SHIPPING, INSTALLING OR INSPECTING ANY REPLACEMENT PART(S) OR STOVE FURNISHED BY FCP UNDER THIS WARRANTY. THE PURCHASE PRICE OF THE STOVE IS A CONSIDERATION FOR THIS LIMITATION OF LIABILITY.

7. ALL IMPLIED WARRANTIES, INCLUDING THOSE OF MERCHANTABILITY AND FITNESS FOR ANY PARTICULAR PURPOSE, ARE LIMITED TO THE WARRANTY PERIODS SPECIFIED ABOVE IN PARAGRAPHS 1 AND 2, AND THE REMEDIES FOR BREACH OF ANY SUCH IMPLIED WARRANTY ARE LIMITED TO THOSE SPECIFIED IN PARAGRAPH 6 ABOVE.

8. THIS WARRANTY IS EXPRESSLY IN LIEU OF ALL OTHER WARRANTIES, EXPRESS OR IMPLIED, INCLUDING THE WARRANTIES OF MERCHANTABILITY AND FITNESS FOR A PARTICULAR PURPOSE, AND FCP NEITHER ASSUMES, NOR AUTHORIZES ANYONE ELSE TO ASSUME FOR IT ANY OTHER LIABILITY IN CONNECTION WITH THE SALE OF THE STOVE OR ANY PARTS OR ACCESSORIES THEREFOR.

In order for this Warranty to be valid the attached card must be entirely completed and mailed, within 30 days after original purchase.

Any claim under this Warranty should be submitted first to the Dealer from whom the stove was purchased. If such Dealer cannot be located the warranty claim, in writing, should be mailed to FCP at the address shown herein, indicating the model number of the stove and the place, price and date of purchase.